REDSOLAR

单晶60片组件
Monocrystalline Module (60 Cells)

320-340W
输出功率 / Output power

20.44%
最高效率 / Maximum efficiency

0~+5W
功率公差 / Power tolerance

全面的产品和体系证书
Comprehensive product certification and system certification

IEC 61215　IEC 61730
IEC TS 62804(抗PID/PID Resistant)
IEC 62716(耐氨气/Ammonia Corrosion)
IEC 61701(耐盐雾/Salt Spray Corrosion)
IEC TS 62941(光伏质量体系/ PV quality Management System)
ISO9001:2015(质量管理体系/ Quality Management System)
ISO14001(环境管理体系/ Environmental Management System)
OHSAS18001(职业健康安全管理体系/ Occupational Health and Safety Management System)

① 抗PID保证 / PID Resistant Guarantee
严选的封装材料免除PID风险。
Strict selection of encapsulation materials eliminates PID risk.

② 严酷环境适用性 / Severe Weather Resilience
经TUV NORD测试验证，通过IEC 61701耐盐雾等级6、IEC62716耐氨气测试认证。
Verified by TUV NORD test，Passed IEC 61701 salt spray corrosion(grade 6), IEC62716 ammonia corrosion test certification.

③ 弱光性能 / Low Light Performance
出色的封装材料及电池工艺，弱光条件下依然表现出色。
Excellent packaging materials and cell technology, excellent performance under low light conditions.

④ 自清洁 / Self Cleaning
优异、可靠的玻璃镀膜技术，保证恶劣环境下稳定的功率输出。
Excellent and reliable glass coating technology to ensure stable power output in severe environment.

12年产品质保·25年线性功率保证
12 Year Product Warranty • 25 Year Linear Power Warranty

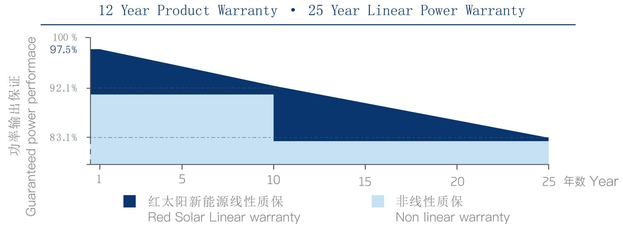

REDSOLAR

组件型号 Model of PV Module	功率范围 Power Range
CETC-xxxM/60	320-340W

组件尺寸（mm）
PV Module Dimension

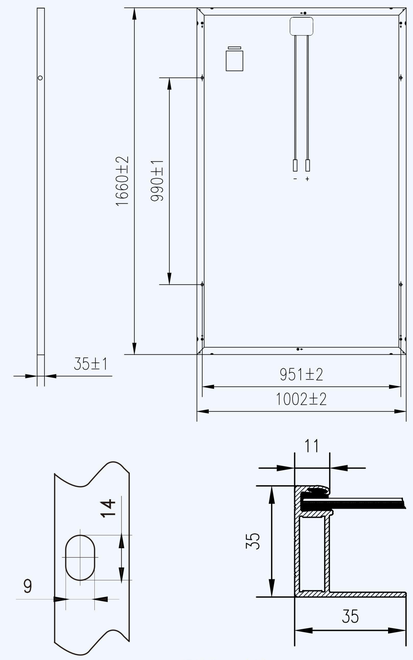

组件的I-V曲线
I-V Curves of PV Module

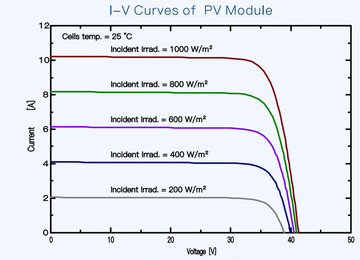

组件的P-V曲线
P-V Curves of PV Module

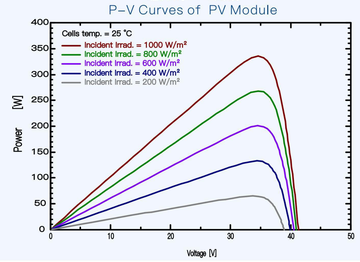

电气参数（STC） / Electrical Parameter(STC)

型号/Model	320M	325M	330M	335M	340M
最大功率/Maximum power	320	325	330	335	340
工作点电压/Working point voltage	33.60	33.90	34.20	34.45	34.72
工作点电流/Working point current	9.52	9.59	9.66	9.74	9.81
开路电压/Open circuit voltage	40.40	40.70	41.00	41.30	41.60
短路电流/Short circuit current	10.01	10.08	10.16	10.23	10.30
组件效率/PV module efficiency	19.24%	19.54%	19.84%	20.14%	20.44%
标准测试条件/Standard test conditions	大气质量AM1.5，辐照度1000W/㎡，电池温度25℃ Atmospheric quality Am1.5, Irradiance 1000w/㎡, Cell Temperature 25℃				

电气参数（NMOT） / Electrical Parameters (NMOT)

型号/Model	320M	325M	330M	335M	340M
最大功率/Maximum power	237.0	241.2	244.6	248.5	252.4
工作点电压/Working point voltage	31.10	31.40	31.60	31.90	32.20
工作点电流/Working point current	7.62	7.68	7.74	7.79	7.84
开路电压/Open circuit voltage	37.50	37.80	38.00	38.30	38.50
短路电流/Short circuit current	8.09	8.14	8.21	8.26	8.32
NMOT	辐照度800W/m²，环境温度20℃，风速1m/s The irradiance is 800W/m, the ambient temperature is 20 degrees, and the wind speed is 1m/s				

在该产品目录中的电性能参数并不单指一块组件，也不是合约中承诺的内容，只做不同类型组件间比较用。
The Electrical performance parameters are neither just referred to one PV panel, nor are a part of the contract; They are only used as reference.

机械参数 / Mechanical Parameters

组件尺寸 / Module size	1660*1002*35mm
电池片数量 / Number of solar cells	60片（6*10）
重量 / Weight	19Kg ±5%
接线盒 / Junction Box	IP67、兼容MC4
线缆 / Cables	4mm²，线长900mm（可定制 / Customizable）
前板玻璃 / Front plate glass	3.2mm，超白，减反射膜钢化玻璃/3.2mm,Ultra white&Minus reflection film toughened glass
正面静态载荷 / Static load on the front	5400Pa
背面静态载荷 / Static load on the back	2400Pa

包装&运输（Packaging&Transport）

40尺集装箱运输 / 40'HQ container transport	31 Pcs/box × 28 box = 868 Pcs
17.5米车运输 / 17.5m truck transport	32 Pcs/box × 40 box = 1280 Pcs

温度参数 / Temperature Parameter

NMOT	45±2℃
最大功率(Pmax)温度系数 Temperature coefficient of maximum power(Pmax)	-0.37%/℃
开路电压(Voc)温度系数 Temperature coefficient of open circuit voltage(Voc)	-0.30%/℃
短路电流(Isc)温度系数 Temperature coefficient of short circuit voltage(Isc)	+0.050%/℃

极限参数 / Maximum Ratings

工作温度 Working temperature	-40~+85℃	
最大系统电压 Maximum system voltage	1000VDC	1500VDC (定制/Custon made)
最大保险丝额定电流 Maximum fuse rated current	15A	

湖南红太阳新能源科技有限公司成立于2008年，由中电科电子装备集团有限公司全资控股,是中国电子科技集团有限公司（世界500强）的成员单位。公司在长沙、北京设有两个生产基地，具备1GW高效组件智能生产能力，是首批符合《光伏制造行业规范条件》的企业。单晶、多晶组件均获"领跑者"一级认证。

Hunan Red Solar New Energy Science and Technology Co., Ltd. , established in 2008 and wholly-owned by CETC Electronics Equipment Group Co., Ltd. member of China Electronics Technology Group Co., Ltd. (Fortune Global 500). The company has two production bases in Changsha and Beijing, which have high-efficiency intelligent module production lines with annual production capacity of 1Gw, The company is the first batch of enterprises that meet the requirements of "Photovoltaic Manufacturing Industry Specification". The monocrystal and Polycrystal PV module are all certified as "top runner".

长沙基地 Changsha base
地址/Address：湖南省长沙市天心区新开铺路1025号/1025, Xinkaipu Road, Tianxin District Changsha City, Hunan Province.
联系方式/Tel：+86 731 85380575（国际/Abroad）　+86 731 85401416（国内/Domestic)

北京基地 Beijing base
地址/Address：北京市通州区光机电一体化产业基地兴光二街6号/NO.6, Xingguang 2nd Street, Opto Mechatronics Industry Base Tongzhou District, Beijing City.
联系方式/Tel：+86 10 81504639（国际/Abroad）　+86 10 81504639（国内/Domestic)

网址/Web：www.red-solar.cn（国内）
www.red-solar.com（海外）