REDSOLAR

黑色单晶60片组件
Black Monocrystalline Module (60 Cells)

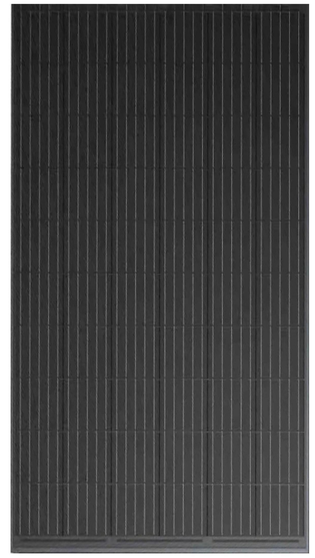

310-330W
输出功率 / Output power

20.00%
最高效率 / Maximum efficiency

0~+5W
功率公差 / Power tolerance

全面的产品和体系证书
Comprehensive product certification and system certification

IEC 61215　IEC 61730

IEC TS 62804(抗PID/PID Resistant)

IEC 62716(耐氨气/Ammonia Corrosion)

IEC 61701(耐盐雾/Salt Spray Corrosion)

IEC TS 62941(光伏质量体系/ PV quality Management System)

ISO9001:2015(质量管理体系/ Quality Management System)

ISO14001(环境管理体系/ Environmental Management System)

OHSAS18001(职业健康安全管理体系/ Occupational Health and Safety Management System)

① 抗PID保证 / PID Resistant Guarantee
严选的封装材料免除PID风险。

Strict selection of encapsulation materials eliminates PID risk.

② 全黑组件 / All-black PV modules
高颜值、高效率全黑组件与建筑色调搭配视觉效果更佳，实现与建筑及生态的完美融合。

Good-looking and efficient all-black module can better match with building in color to realize a better visual effect and the perfect intergration between the building and the ecology.

③ 电池技术 / Cell technology
优异的膜层结构设计，全黑组件各角度颜色均匀性、一致性优。

Excellent film structure design and excellent coloruniformity and consistency.

④ 工艺和辅材 / Process and auxiliary materials
采用焊带贴膜工艺、黑色背板和边框等使组件表面颜色均匀统一。

Welding tape film process, black back-sheet and Al-Frame, etc. make the PV-Module surface color uniform.

12年产品质保·25年线性功率保证
12 Year Product Warranty · 25 Year Linear Power Warranty

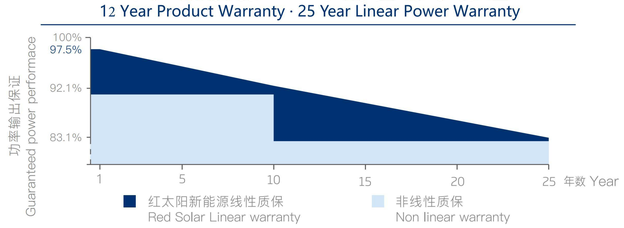

REDSOLAR

组件型号 Model of PV Module	功率范围 Power Range
CETC-xxxM/60	310-330W

组件尺寸（mm）
PV Module Dimension

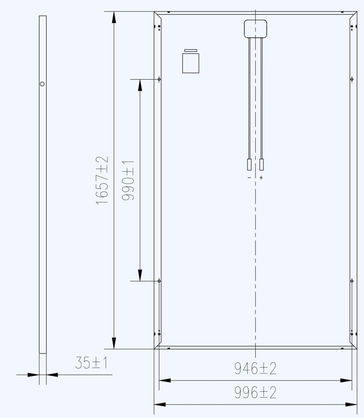

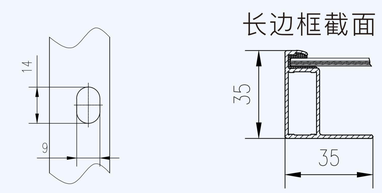

组件的I-V曲线
I-V Curves of PV Module

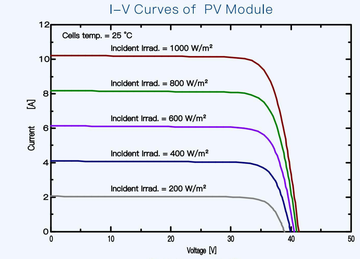

组件的P-V曲线
P-V Curves of PV Module

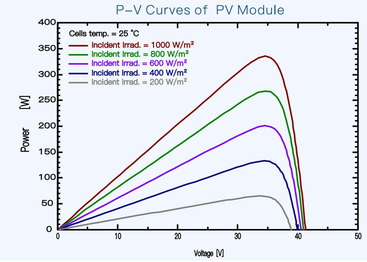

电气参数（STC） / Electrical Parameter(STC)

型号/Model	310M	315M	320M	325M	330M
最大功率/Maximum power	310	315	320	325	330
工作点电压/Working point voltage	33.10	33.40	33.60	33.90	34.20
工作点电流/Working point current	9.37	9.44	9.52	9.59	9.66
开路电压/Open circuit voltage	39.80	40.10	40.40	40.70	41.00
短路电流/Short circuit current	9.87	9.95	10.01	10.08	10.16
组件效率/PV module efficiency	18.78%	19.09%	19.39%	19.69%	20.00%
标准测试条件/Standard test conditions	大气质量AM1.5，辐照度1000W/㎡，电池温度25℃ Atmospheric quality Am1.5, Irradiance 1000w/㎡, Cell Temperature 25℃				

电气参数（NMOT） / Electrical Parameters (NMOT)

型号/Model	310M	315M	320M	325M	330M
最大功率/Maximum power	230.1	233.5	237.0	241.2	244.6
工作点电压/Working point voltage	30.60	30.80	31.10	31.40	31.60
工作点电流/Working point current	7.52	7.58	7.62	7.68	7.74
开路电压/Open circuit voltage	36.90	37.20	37.50	37.80	38.00
短路电流/Short circuit current	7.98	8.04	8.09	8.14	8.21
NMOT	辐照度800W/m²，环境温度20℃，风速1m/s The irradiance is 800W/m, the ambient temperature is 20 degrees, and the wind speed is 1m/s				

在该产品目录中的电性能参数并不单指一块组件，也不是合约中承诺的内容，只做不同类型组件间比较用。
The Electrical performance parameters are neither just referred to one PV panel, nor are a part of the contract; They are only used as reference.

机械参数 / Mechanical Parameters

组件尺寸 / Module size	1657*996*35mm
电池片数量 / Number of solar cells	60片（6*10）
重量 / Weight	18Kg ±5%
接线盒 / Junction Box	IP67、兼容MC4
线缆 / Cables	4mm²，线长900mm（可定制 / Customizable）
前板玻璃 / Front plate glass	3.2mm，超白，减反射膜钢化玻璃/3.2mm,Ultra white&Minus reflection film toughened glass
正面静态载荷 / Static load on the front	5400Pa
背面静态载荷 / Static load on the back	2400Pa

包装&运输（Packaging&Transport）

40尺集装箱运输 / 40'HQ container transport	31 Pcs/box × 28 box = 868 Pcs
17.5米车运输 / 17.5m truck transport	32 Pcs/box × 40 box = 1280 Pcs

温度参数 / Temperature Parameter

NMOT	45±2℃
最大功率(Pmax)温度系数 Temperature coefficient of maximum power(Pmax)	-0.37%/℃
开路电压(Voc)温度系数 Temperature coefficient of open circuit voltage(Voc)	-0.30%/℃
短路电流(Isc)温度系数 Temperature coefficient of short circuit voltage(Isc)	+0.050%/℃

极限参数 / Maximum Ratings

工作温度 Working temperature	-40~+85℃	
最大系统电压 Maximum system voltage	1000VDC	1500VDC (定制/Custon made)
最大保险丝额定电流 Maximum fuse rated current	15A	